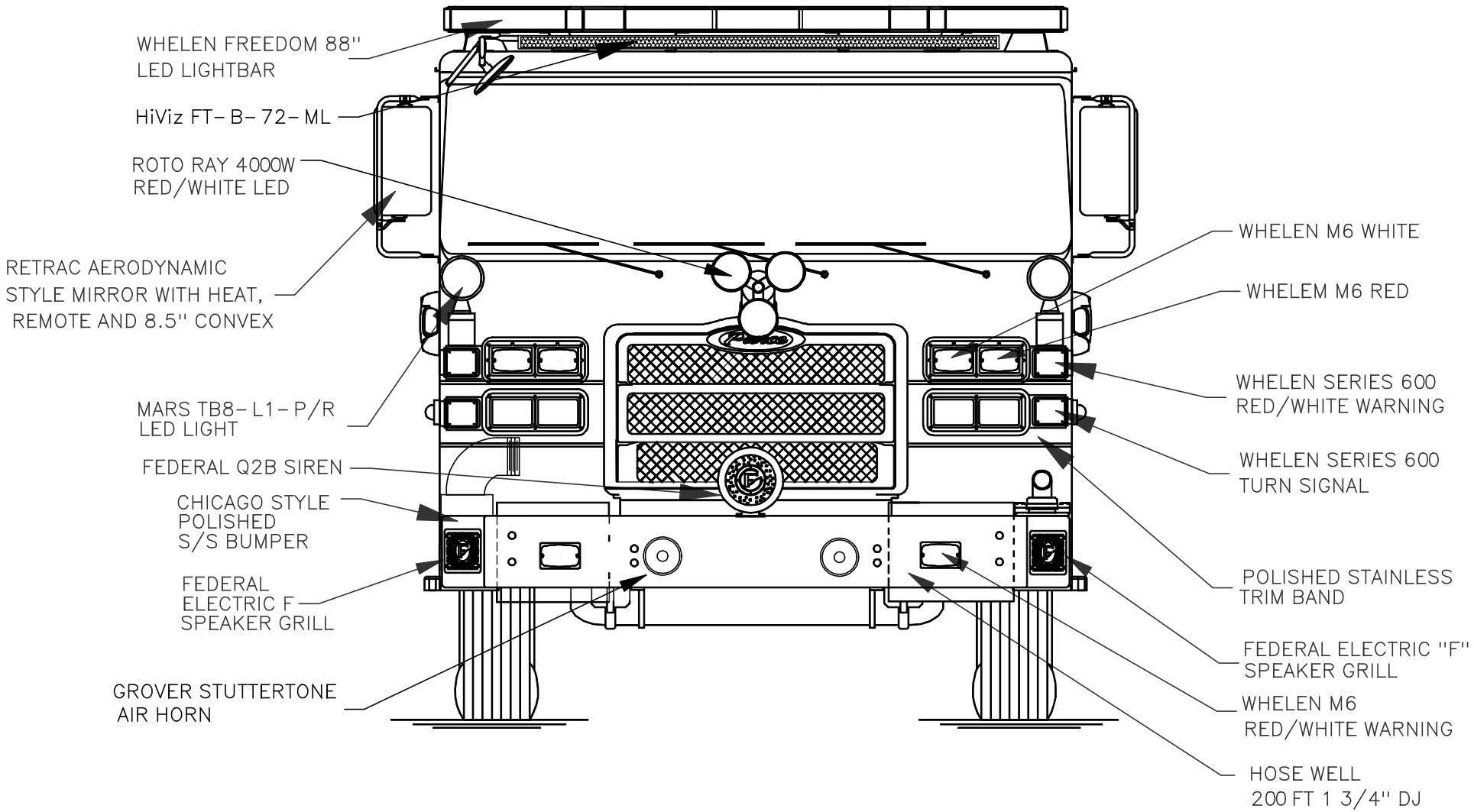
WHELEN FREEDOM 88''
LED LIGHTBAR
HiViz FT-B-72-ML
ROTO RAY 4000W
RED/WHITE LED
RETRAC AERODYNAMIC
STYLE MIRROR WITH HEAT,
REMOTE AND 8.5'' CONVEX
MARS TB8-L1-P/R
LED LIGHT
FEDERAL Q2B SIREN
CHICAGO STYLE
POLISHED
S/S BUMPER
FEDERAL
ELECTRIC F
SPEAKER GRILL
GROVER STUTTERTONE
AIR HORN
WHELEN M6 WHITE
WHELEM M6 RED
WHELEN SERIES 600
RED/WHITE WARNING
WHELEN SERIES 600
TURN SIGNAL
POLISHED STAINLESS
TRIM BAND
FEDERAL ELECTRIC ''F''
SPEAKER GRILL
WHELEN M6
RED/WHITE WARNING
HOSE WELL
200 FT 1 3/4'' DJ